True Tilt & Rotate
Plaster-in adjustable LED downlight
Origin

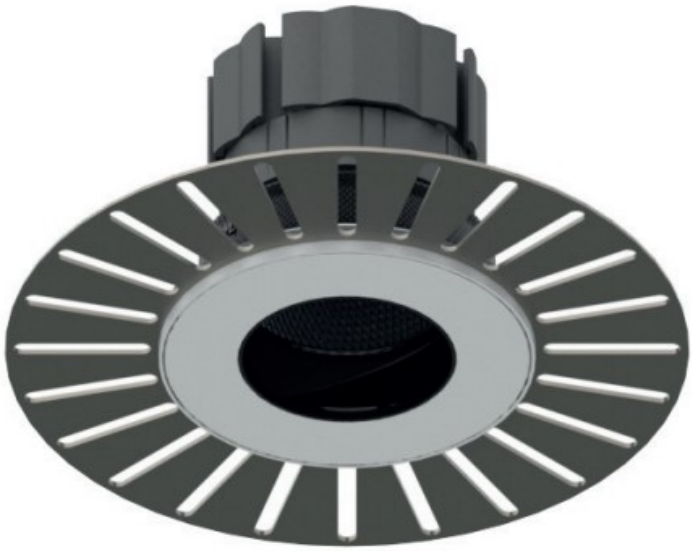

Overview
A small, circular LED downlight with 28° tilt and 360° rotation from behind the scenes. The first fix skimmer allows the fitting to be fitted at a later date with the bezel fitting flush to the plaster making the product ultra discrete. It's a versatile downlight suitable for many applications. 86mm cut out

The light engine utilises a bespoke phosphor LED to deliver an exceptionally high average colour rendering (CRI : 98)

2700K	Spot	Medium	Wide	Flood
Beam Width	10°	27°	39°	45°
Initial Lumens*	624	1077	1077	1077
Engine Lumens*	437	931	931	924
*(Tc 85°, +/-7%)				
Circuit Power (typ)	10.6W	11.6W	11.6W	11.6W

3000K	Spot	Medium	Wide	Flood
Beam Width	10°	27°	40°	45°
Initial Lumens*	661	1156	1156	1156
Engine Lumens*	437	954	984	978
*(Tc 85°, +/-7%)				
Circuit Power (typ)	10.6W	11.6W	11.6W	11.6W

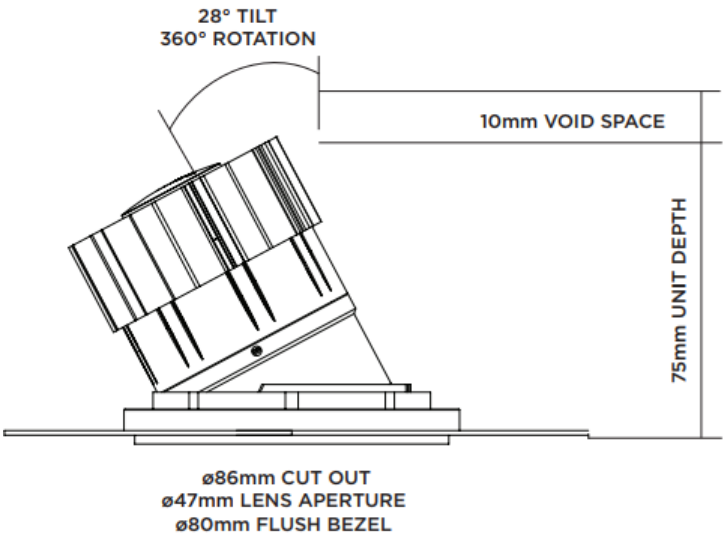

Finishes
Available in a range of standard and bespoke finish options for the whole luminaire. The standard white bezel is RAL9010 fine texture with 20% gloss, however we can offer any other RAL colour (additional charges and setup charges may apply).

The fitting is also available in Polished Chrome, Brushed Chrome, Polished Brass, Antique Brass, Polished Copper, Antique Copper and Antique Bronze.

The anti-glare baffle is Black as standard but can be any RAL paint or a selection of anodised or plated finish (additional charges and setup charges may apply).

Driver Options
Non-dim driver
Mains dimming driver
0-10v dimming driver
DALI driver

LED Colour Temperature
2700K (very warm white)
2938K (warm white)
4000K (by request only)

Fitting Options
60 Minute Fire Rating
Spreader Lens
Anti-glare Honeycomb Louvre
Frosted Lens
Lockable tilt & rotate

IP Rating
IP54 as standard.
Optional IP65

Notes
Wire in **series** and observe correct polarity.
Do not wire 'live.'

50,000 hours to L90 and a 5 year fitting warranty.
Designed and made in the UK.

Unit 9, Severfield Close, Thirsk Industrial Park, THIRSK, YO7 3BX
web: www.brilliantlighting.co.uk
tel: 01845 525664